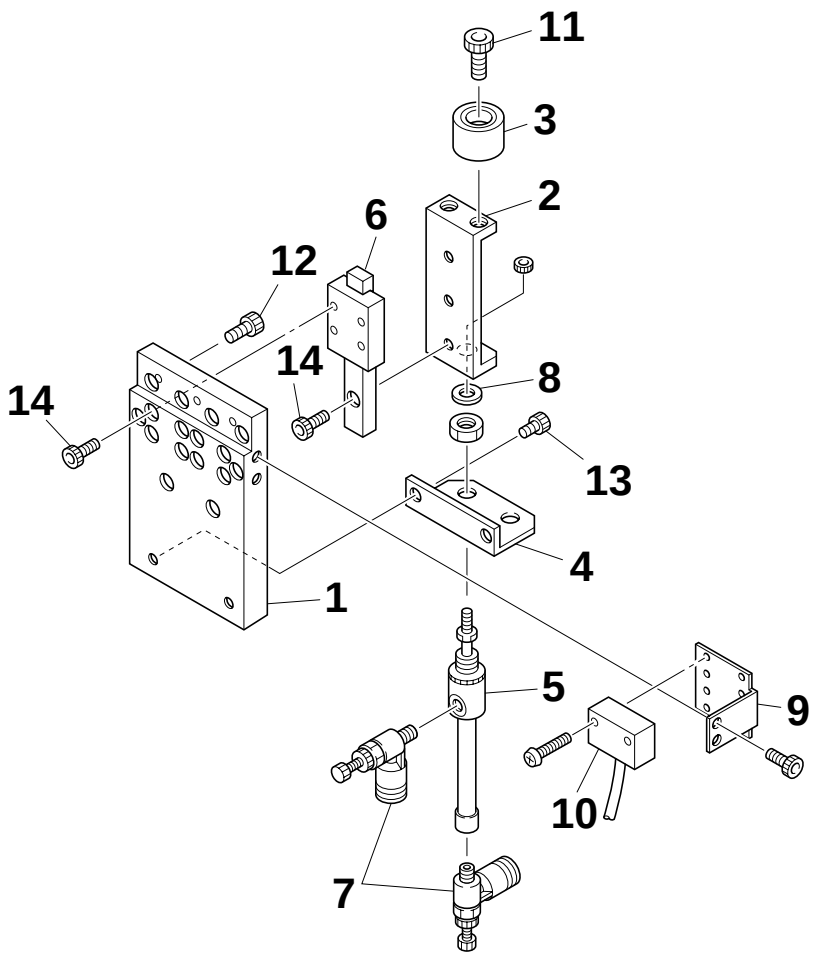
11
3
2
6
12
14
14
8
13
4
1
5
9
10
7

| No. | Part No. | Part Name | Q'ty | Remarks |
|---|---|---|---|---|
| 1 | KU0-M9161-00X | PLATE 1, STOPPER | 1 | |
| 2 | KU0-M9162-00X | BRACKET, STOPPER | 1 | |
| 3 | KM7-M9163-00X | STOPPER | 1 | |
| 4 | KU0-M9164-01X | BRACKET, CYLINDER | 1 | |
| 5 | KG7-M9165-00X | CYLINDER | 1 | |
| 6 | K46-M9174-10X | GUIDE | 1 | |
| 7 | $SC4-M5A | SPEED, CONTROLLER | 2 | |
| 8 | KU0-M9179-00X | RING | 1 | |
| 9 | KU0-M91B2-00X | BRKT., SENSOR | 1 | |
| 10 | KH4-M655F-20X | SENSOR 1-3 | 1 | |
| 11 | 91317-06010 | BOLT, HEX. SOCKET HEAD | 1 | |
| 12 | 91317-04010 | BOLT, HEX. SOCKET HEAD | 2 | |
| 13 | 91317-04005 | BOLT, HEX. SOCKET HEAD | 2 | |
| 14 | 91317-03008 | BOLT, HEX. SOCKET HEAD | 7 | |

| No. | Part No. | Part Name | Q'ty | Remarks |
|---|---|---|---|---|